Published: 11-May-2011

# Fuel Charging and Controls - TD4 2.2L Diesel -

**General Specification**

| Item | Specification |
|---|---|
| Maximum continuous flow | 160 l/hr |
| Maximum engine consumption | 40 l/hr |
| Maximum return flow | 90 l/hr |
| Maximum pressure on return line | 0.7 bar (10.2 lb/in²) |
| Minimum pressure at engine | 0.5 bar (7.3 lb/in²) |
| Minimum pressure at filter | 0.3 bar (4.4 lb/in²) |
| Recommended fuel | EN590 |

**Fuel Pressures**

| Component | bar | lb/in² |
|---|---|---|
| **Fuel pump (vacuum pressure):** | | |
| Cranking | 0.133 | 1.9 |
| Full load | 0.267 | 3.9 |
| High pressure fuel injection pump | 1600 | 23206 |

**Torque Specifications**

| Description | Nm | lb-ft |
|---|---|---|
| EGR pipe | 10 | 7 |
| Fuel injector clamp retaining bolts | 5 + 110° | 4 + 110° |
| Fuel rail retaining bolts | 18 | 13 |
| Fuel pump to fuel rail high-pressure fuel line retaining bolt | 10 | 7 |
| **Fuel pump to fuel rail high-pressure fuel line unions:** | | |
| **Stage 1** | 22 | 16 |
| **Stage 2** | 25 | 18 |
| Fuel injection pump securing bolts | 22 | 16 |
| Fuel pump bracket | 10 | 7 |
| **High pressure fuel supply line unions:** | | |
| **Stage 1** | 22 | 16 |
| **Stage 2** | 25 | 18 |
| Throttle body screws | 9 | 7 |

-

Published: 11-May-2011

# Fuel Charging and Controls - TD4 2.2L Diesel - Fuel Charging and Controls

Description and Operation

## COMPONENT LOCATION

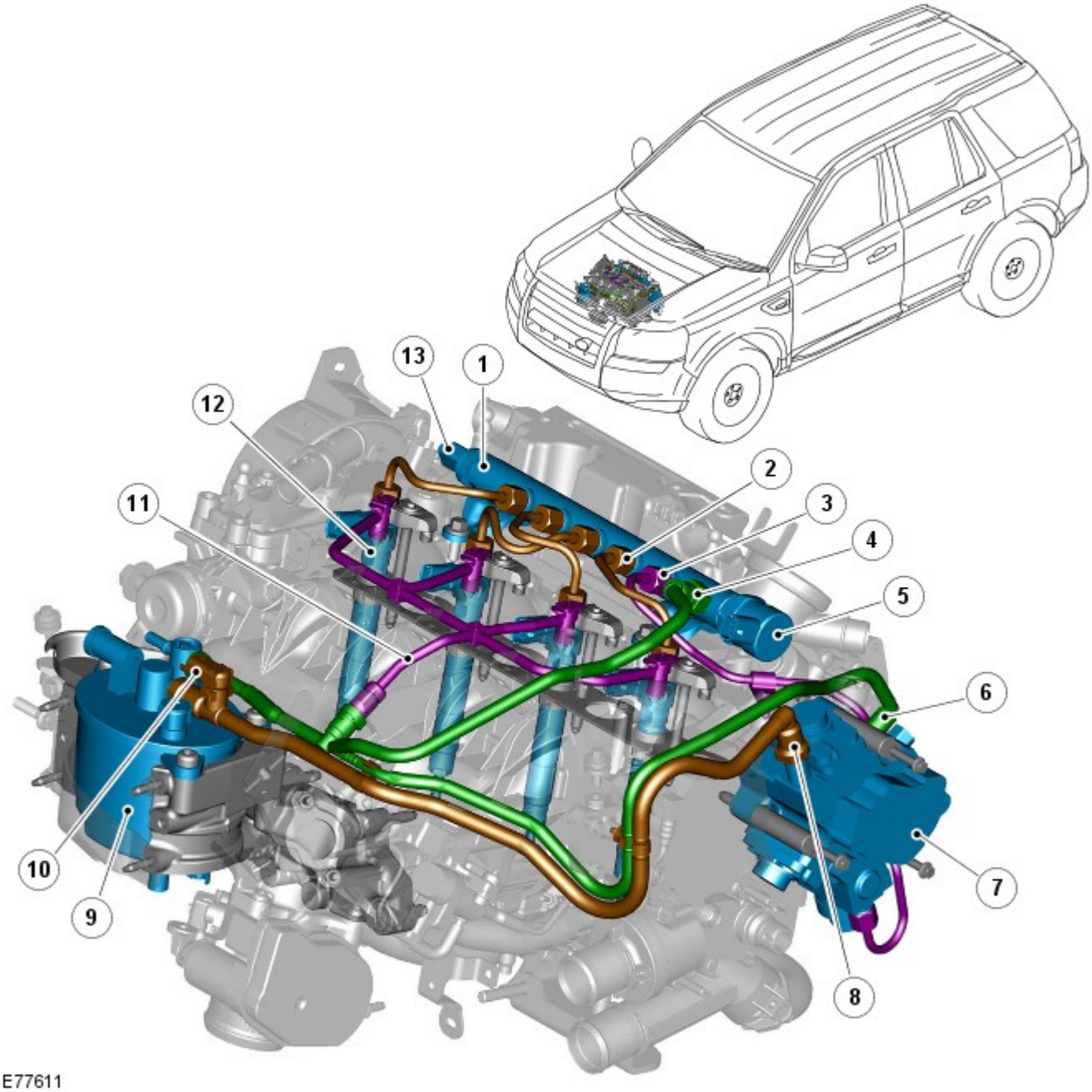


E77611

| Item | Part Number | Description |
|---|---|---|
| 1 | - | Common fuel rail |
| 2 | - | High pressure pipe – fuel rail to injector (4 off) |
| 3 | - | High pressure pipe – pump to fuel rail |
| 4 | - | Pipe – fuel rail pressure relief |
| 5 | - | Fuel rail pressure control valve |
| 6 | - | Hose - high pressure pump leak off |
| 7 | - | High pressure fuel pump |
| 8 | - | Low pressure hose – fuel filter to pump |
| 9 | - | Fuel filter assembly |
| 10 | - | Fuel temperature sensor |
| 11 | - | Pipe - injector leak off |

| | | |
|---|---|---|
| 12 | | Injector (4 off) |
| 13 | | Fuel rail pressure sensor |

## OVERVIEW

The TD4 diesel engine fuel charging and control system provides precise and instantaneous fuel delivery to the combustion chambers. This provides optimum performance, allowing the engine to be extremely responsive to driver demands for all driving conditions. The fuel system features a Bosch Generation 3 common rail injection system that is monitored and controlled by an engine control module (ECM), to precisely control the fueling strategy.

Fuel charging is achieved with a low and high-pressure fuel system. The low-pressure fuel system comprises;

- a saddle type fuel tank
- tank mounted fuel delivery module with integral transfer pump
- fuel supply and return lines
- filter and water separator assembly
- a connecting hose between the fuel filter assembly and the fuel lift pump.

NOTE: The fuel lift pump is integral with the high-pressure pump.

A return line and fuel leak off hoses from the high-pressure pump, injectors and common fuel rail form the remainder of the low-pressure fuel return circuit.
For additional information, refer to: Fuel Tank and Lines - 2.2L Duratorq-TDCi (DW) Diesel (310-01 Fuel Tank and Lines, Description and Operation).

The high-pressure fuel system comprises;

- a high-pressure fuel pump
- common fuel rail
- 4 piezo-injectors with high-pressure connection pipes
- a fuel pressure sensor.

The fuel charging and control system provides injection pressures of up to 1800 bar (26,106 psi). Finer atomization of the injected fuel is achieved with the 7 hole piezo injectors that are capable of near instantaneous response to the ECM commands, allowing up to 5 individual injections per stroke.

The high-pressure fuel pump is mounted at the rear of the cylinder head and is driven by the exhaust camshaft. A fuel lift pump is integral with the high-pressure pump and is therefore also driven when the exhaust camshaft rotates. The lift pump creates suction in the supply line to the fuel tank and draws the fuel from the tank. The fuel passes through the fuel filter and is then delivered at lift pump pressure to the high-pressure pump inlet port.

The advanced high-pressure fueling system enables pilot injections to be delivered ahead of the main charge of fuel. This produces a steady flame front and creates a progressive pressure rise in the cylinder similar to that achieved with petrol engines. This reduction in combustion lag between the injection of fuel and combustion occurring allows fuel to be injected while combustion is taking place, creating increased power and reducing created combustion noise, vibration and harshness (NVH) and emissions.

For models fitted with an exhaust system diesel particulate filter, the high-pressure fueling system also provides post combustion injection of fuel into the combustion chambers. When regeneration of the diesel particulate filter is requested, the ECM allows the fueling system to deliver fuel after the combustion stroke and into the commencement of the exhaust stroke. This post combustion injection process causes fuel to be burnt in the exhaust system and creates the high exhaust gas temperatures that are required to regenerate the diesel particulate filter.

Part Number

Published: 11-May-2011

# Fuel Charging and Controls - TD4 2.2L Diesel - Fuel Charging and Controls

Description and Operation

## COMPONENT LOCATION

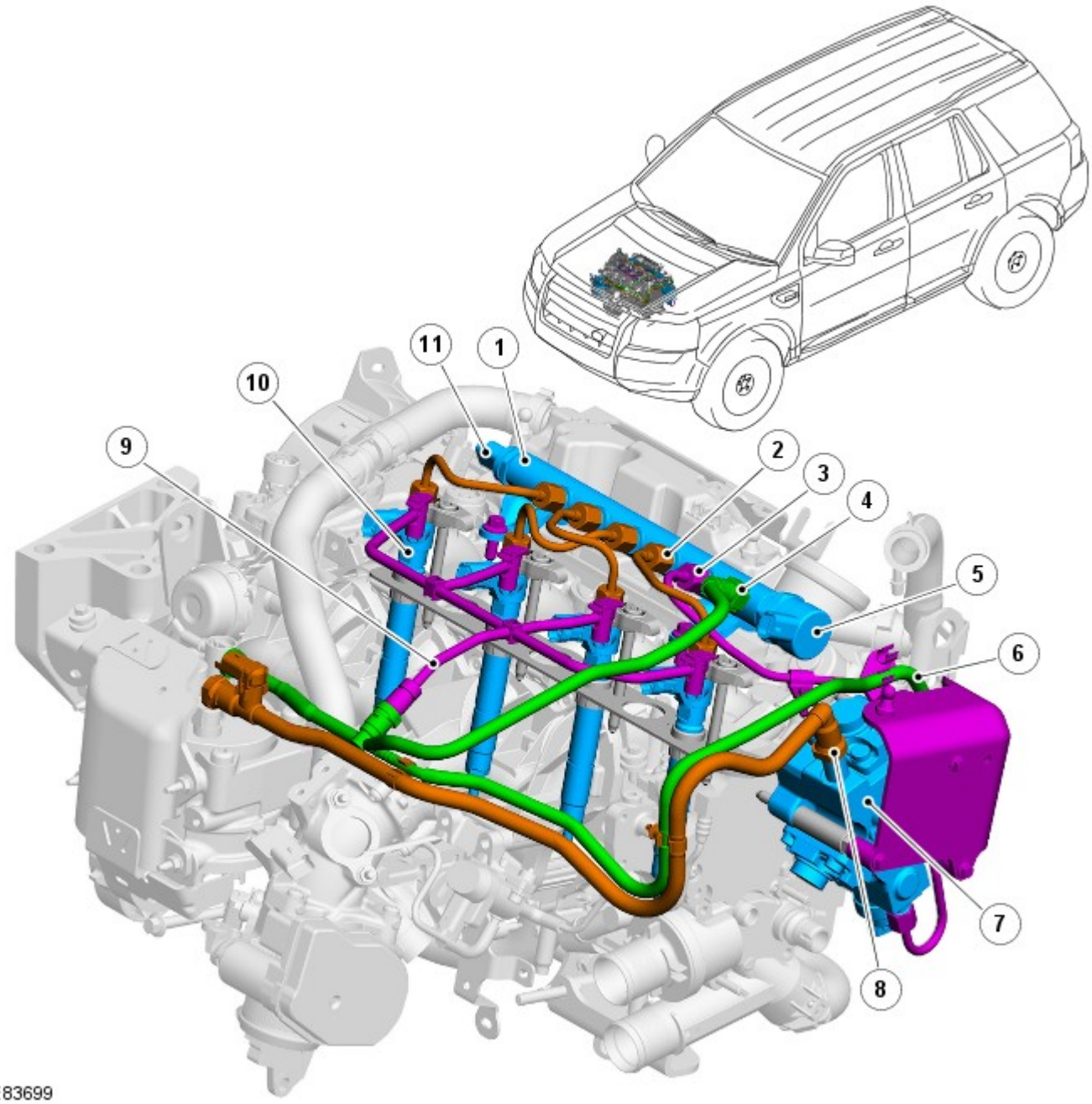


| Item | Part Number | Description |
|---|---|---|
| 1 | - | High-Pressure (HP) common fuel rail |
| 2 | - | HP pipe – fuel rail to injector (4 off) |
| 3 | - | HP pipe – HP pump to fuel rail |
| 4 | - | Low Pressure (LP) pipe – fuel rail leak-off |
| 5 | - | Pressure Control Valve (PCV) |
| 6 | - | LP pipe - HP pump leak-off |
| 7 | - | HP fuel pump and integral lift pump |
| 8 | - | Fuel supply pipe - filter to lift pump |
| 9 | - | LP pipe - injector leak-off |
| 10 | - | Injector (4 off) |
| 11 | - | Fuel rail pressure sensor |

## OVERVIEW

The TD4 diesel engine fuel charging and control system provides precise and instantaneous fuel delivery to the engine combustion chambers. The fuel system features a Bosch Generation 3 common rail injection system that is monitored and controlled by the Engine Control Module (ECM), to precisely control the fueling strategy.
For additional information, refer to: Electronic Engine Controls - 2.2L Diesel (303-14 Electronic Engine Controls - 2.2L Diesel, Description and Operation).

Fuel injection pressure is generated independently of engine speed and fuel injection events. The HP fuel system is controllable to the optimum level for smooth operation, and is capable of developing an injection pressure up to 1,600 bar (23,206 psi). The fuel injection timing and volume are calculated by the ECM that also energizes the appropriate piezo-actuated injector.

The fuel system features a pre-injection (pilot) phase to reduce combustion noise and mechanical load. On vehicles installed with a Diesel Particulate Filter (DPF), the fuel system also provides a post-injection phase that is required for regenerating the DPF.
For additional information, refer to: Exhaust System (309-00B Exhaust System - TD4 2.2L Diesel, Description and Operation).

This type of fuel system allows the TD4 engine to achieve excellent levels of performance and engine response, while being able to meet current and future exhaust emission legislation.

Fuel charging is achieved with a LP and HP fuel system. The LP fuel system comprises:

- Saddle type fuel tank
- Tank mounted fuel delivery module and integral transfer pump
- Fuel supply and return lines
- Filter and water separator assembly.
  For additional information, refer to: Fuel Tank and Lines (310-01B Fuel Tank and Lines - TD4 2.2L Diesel, Description and Operation).

The HP fuel system comprises:

- HP fuel pump with integral mounted lift pump and Volume Control Valve (VCV)
- Common fuel rail with integral PCV and pressure sensor
- 4 piezo-injectors
- HP connecting pipes
- Fuel leak-off pipes.

## HIGH-PRESSURE FUEL PUMP

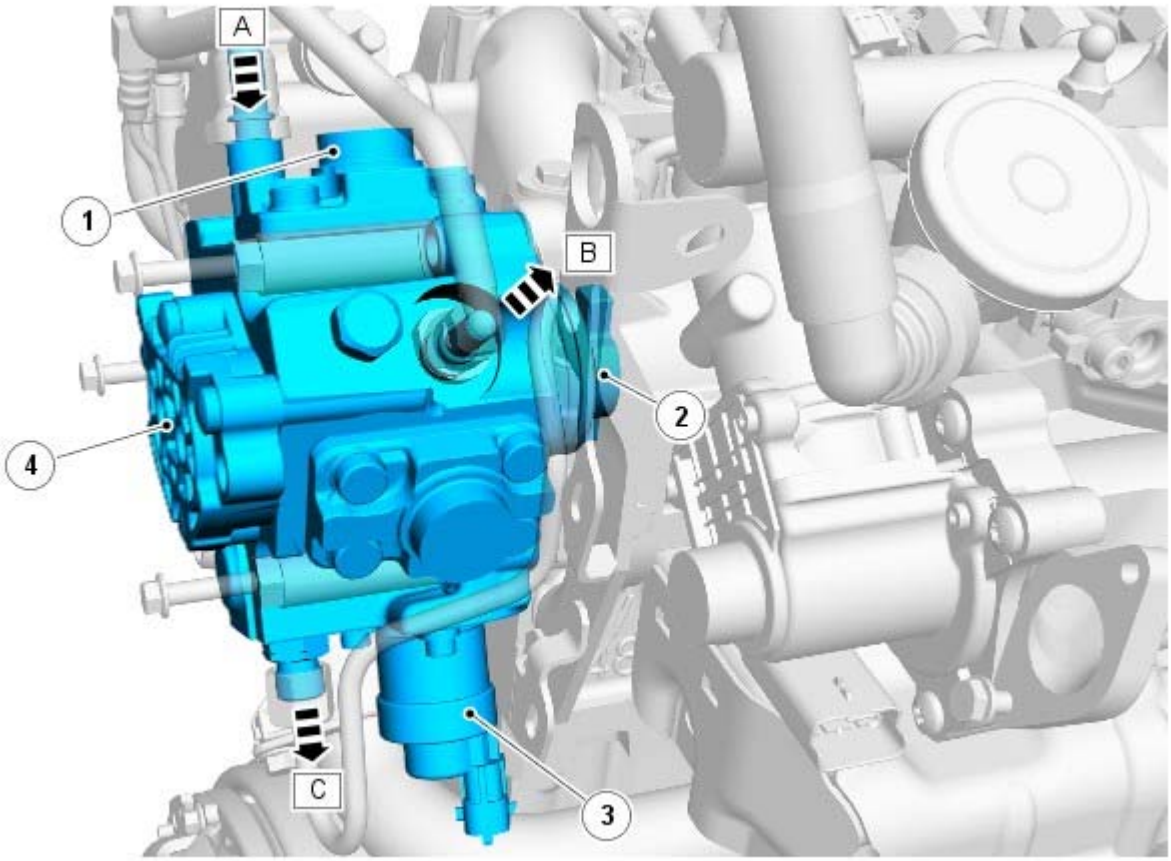


| Item | | Description |
|---|---|---|

| | | |
|---|---|---|
| A | | Fuel supply connection - filter to lift pump |
| B | | LP fuel return connection to filter |
| C | | HP fuel supply connection to fuel rail |
| 1 | | HP pump element (3 off) |
| 2 | | HP pump drive shaft |
| 3 | | VCV |
| 4 | | Lift pump |

The HP fuel pump is mounted to the rear of the cylinder head (transmission side), and is driven by the exhaust camshaft. The fuel pump is a 3-piston, radial plunger type, with the pumping elements spaced equally at 120 degrees apart. The high-pressure output from the pump elements is connected to a fuel ring circuit within the fuel pump, and provides a constant pressurized fuel supply to the fuel rail. The pump is capable of producing a maximum fuel pressure of 1,600 bar (23,206 psi).

The fuel system HP pump comprises the following components:

- 3 HP pumping elements
- Integral lift pump
- Volume Control Valve (VCV).

The HP pump and integral lift pump must not be separated. The HP pump is not timed to the engine.

A controlled amount of fuel is allowed to leak-off through the HP pump, and returned through a leak-off pipe to the fuel filter. The leak-off fuel provides cooling and lubrication for the HP pump internal components.

### Lift Pump

A fuel lift pump is mounted to the rear of the fuel pump, and forms an integral assembly with the HP pump. The fuel lift pump is a gear type pump and connected to the fuel filter supply line. The lift pump creates a vacuum (negative pressure) in the supply line to the fuel tank, and draws the fuel from the tank. The fuel passes through the fuel filter and is then delivered at lift pump pressure to the HP pump inlet port.

The lift pump normal operating, negative pressure values are shown for the following engine conditions:

| Engine Condition | Lift Pump Negative Pressure |
|---|---|
| Cranking | -133 ± 7 mbar (-10 ± 0.5 cmHg) |
| Full load | -267 ± 133 mbar (-20 ± 10 cmHg) |

### Volume Control Valve (VCV)

The VCV is mounted on the HP pump, and located in the feed port between the HP pump elements and the fuel lift pump. The VCV is a variable position solenoid-operated valve that is controlled by the ECM with a 12V Pulse Width Modulated (PWM) signal. The VCV controls the quantity of fuel delivered by the lift pump to the HP pump elements.

When the HP fuel pump rotates, pressure is created when the VCV is open and the fuel rail mounted PCV is closed. The VCV and PCV are variable position valves, and used by the ECM to control fuel delivery and fuel system pressure.

During the fuel heating period when the supply fuel temperature is less than 40°C (104°F), the ECM will fully open the VCV. Fuel volume and pressure is then controlled directly by the PCV under the control of the ECM.

The VCV is normally open when the solenoid is not energized by the ECM. The resistance value of the VCV solenoid coil is 2.8 ohms at 20°C (68°F).
For additional information, refer to: Electronic Engine Controls - 2.2L Diesel (303-14 Electronic Engine Controls - 2.2L Diesel, Description and Operation).

## COMMON FUEL RAIL

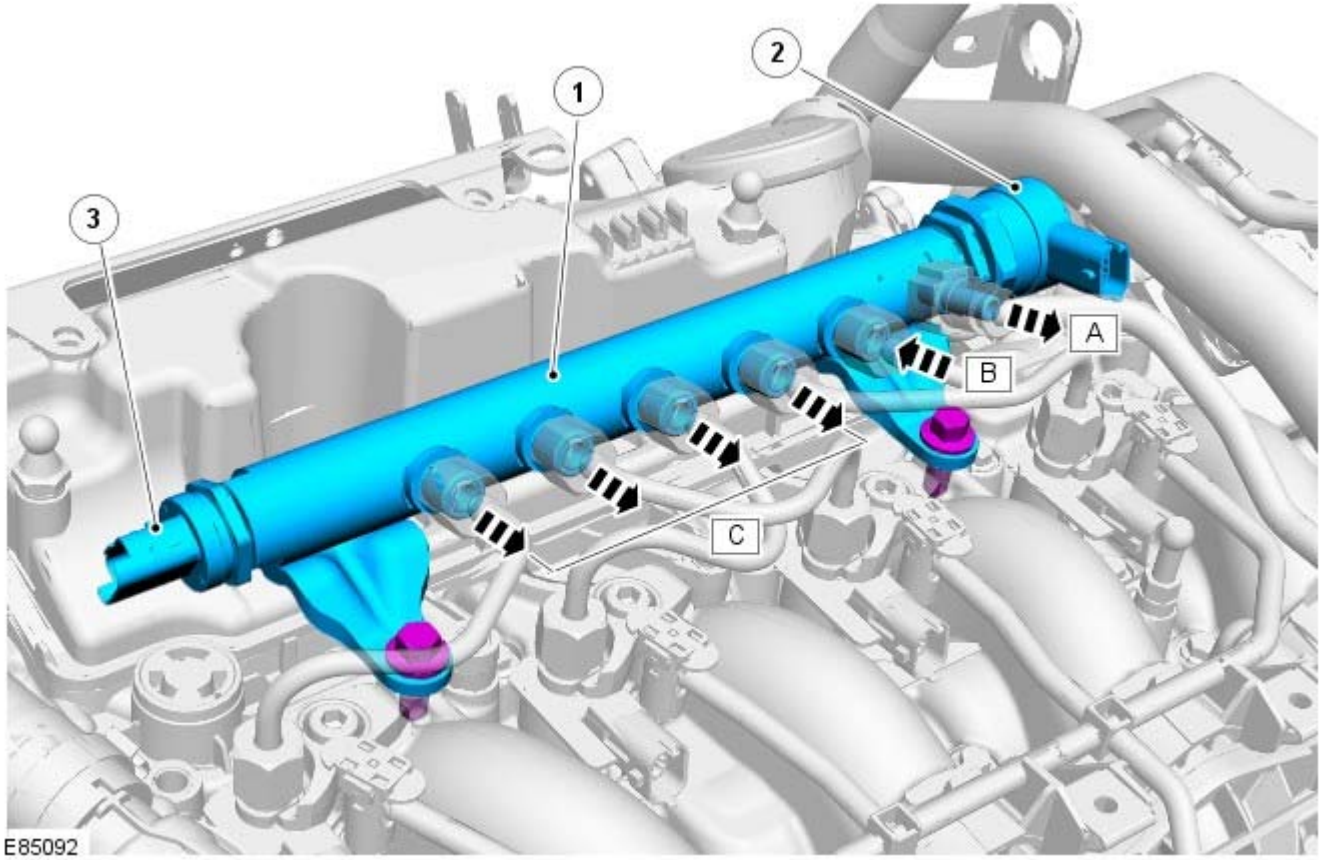


| Item | | Description |
|---|---|---|
| A | | LP fuel return connection to filter |
| B | | HP fuel supply connection – HP pump to fuel rail |
| C | | HP pipe connection – fuel rail to injector (4 off) |
| 1 | | Fuel rail |
| 2 | | PCV |
| 3 | | Fuel rail pressure sensor |

The fuel rail is manufactured from forged steel and secured to the cylinder head with 2 fixings. The fuel rail stores pressurized fuel from the HP pump, and prevents pressure fluctuations in the HP system. A fuel rail pressure sensor and a PWM PCV are installed into the bore at each end of the fuel rail. The pressure sensor is installed at the accessory drive end of the fuel rail; the PCV installed at the transmission end of the fuel rail.

High-pressure fuel pipes connect the fuel rail to the HP pump and fuel injectors. A leak-off pipe connects the fuel rail to the fuel filter return circuit.

The common fuel rail, fuel pressure sensor and PCV form an integral assembly, and must not be separated. If a fault occurs that requires component renewal, then the complete fuel rail assembly must be renewed.

## Fuel Rail Pressure Sensor

The fuel rail pressure sensor is mounted in the end of the fuel rail (accessory drive end) and connected to the ECM via the engine harness. The pressure sensor is provided with a 5V power supply, ground and signal connections. The fuel rail pressure sensor is a piezo-resistive type sensor containing an actuating diaphragm. Deflection of the diaphragm provides a proportional signal (output) voltage to the ECM, dependant on the fuel pressure within the fuel rail.

**Pressure Sensor Parameters**

| Pressure Sensor Output Voltage | Fuel Rail Pressure |
|---|---|
| 0.5V | 230 bar (3,336 psi) |
| 4.5V | 1,600 bar (23,206 psi) |

The ECM compares the sensor signal voltage to stored memory values, in order to calculate the actual fuel pressure present in the fuel rail. The ECM then uses the fuel rail pressure information to control the operating position of the VCV and PCV.
For additional information, refer to: Electronic Engine Controls - 2.2L Diesel (303-14 Electronic Engine Controls - 2.2L Diesel, Description and Operation).

## Pressure Control Valve (PCV)

The PCV is mounted in the end of the fuel rail (transmission end) and connected to the ECM via the engine harness. The PCV is a solenoid-operated valve controlled by a 12V PWM signal. The ECM operates the PCV to adjust the fuel pressure within the

fuel rail. Relieved fuel is directed through the fuel rail leak-off pipe to the fuel filter return circuit. The leak-off fuel also provides cooling and lubrication for the PCV.
For additional information, refer to: Electronic Engine Controls - 2.2L Diesel (303-14 Electronic Engine Controls - 2.2L Diesel, Description and Operation).

The PCV is normally open when the solenoid is not energized by the ECM. The resistance value of the PCV solenoid coil is 3.6 ohms at 20°C (68°F).

The PCV is also used by the ECM to provide direct control of the fuel system, in the following situations:

- During sudden transient phases in engine speed (suddenly lifting off the accelerator pedal, for example) where VCV action is not sufficient to affect the supply of fuel to the fuel rail.
- To control fuel pressure in the event that the VCV fails.
- During the fuel heating period, when supply fuel temperature is less than 40°C (104°F). The VCV is fully opened by the ECM and the HP pump compresses a maximum quantity of fuel to raise the fuel temperature. The PCV is then modulated by the ECM to provide leak-off fuel from the fuel rail to the fuel filter return circuit. The fuel is then recirculated through the fuel filter and back to the HP pump.
- When the fuel supply temperature is greater than 70°C (158°F). The PCV is modulated by the ECM to release fuel rail pressure, subsequently decreasing the fuel temperature to protect the fuel system components. Leak-off fuel from the fuel rail is directed to the fuel filter return circuit and back to the fuel tank.
- During engine shutdown to progressively collapse fuel rail pressure.

## FUEL INJECTORS

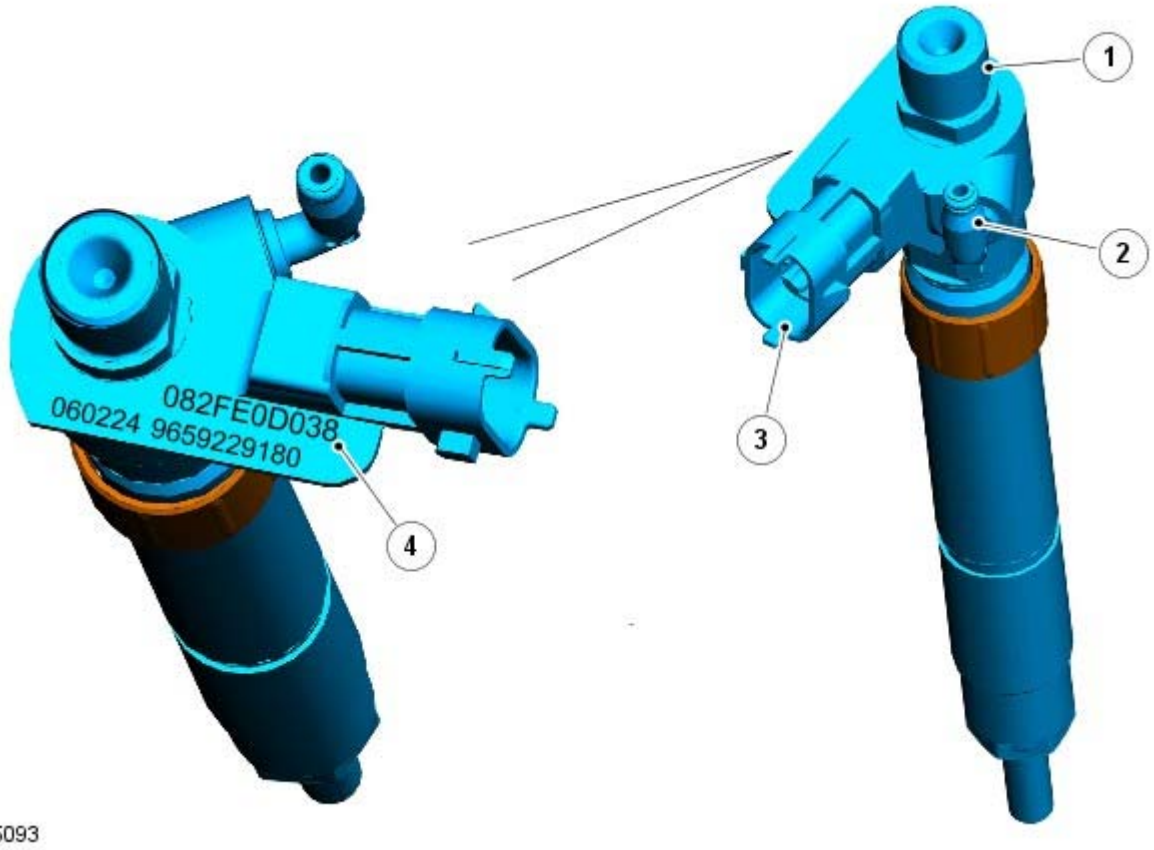


| Item | | Description |
|---|---|---|
| 1 | | HP fuel supply connection from fuel rail |
| 2 | | LP fuel leak-off connection to filter |
| 3 | | Electrical connection to ECM |
| 4 | | Injector 10-digit code |

The 4 fuel injectors are of the piezo-electric actuated type, each manufactured with 7 spray holes in the injector nozzle. The injectors are located centrally within the cylinder head combustion chambers to spray atomized fuel directly onto the toroidal dome of the pistons.

**Technical Details**

| Operating Parameter | Value |
|---|---|
| Supply voltage 110V to 150V | 230 bar (3,336 psi) to 1,600 bar (23,206 psi) |
| Resistance | 180 Kohms at 20°C (68°F) |
| Minimum charging time | 100 µS |
| Minimum discharge time | 100 µS |

| Operating Parameter | Value |
|---|---|
| Spray nozzle diameter | 143 µm |
| Maximum capable delivery | 11 $cm^3$/second |

During manufacture each injector is tested to measure the actual injected quantity of fuel, compared to a reference quantity for simulated conditions. The tests are used to categorize the injectors, the difference in the injection analysis results is translated to a 10-digit alpha-numerical code that is stamped on the injector casing.

The 10-digit codes are stored in the ECM memory along with the corresponding cylinder numbers for each injector, and an engine performance software map. The ECM recognizes each injector 10-digit code and adapts the operation of each injector to provide similar injection pressures and quantity of delivered fuel for the current operating condition, in accordance with the programmed software map.

The injector body contains a stack of piezo-electric crystals mounted above a control piston. The piezo crystals are actuated by a supply voltage from the ECM. The control piston is separated with a hydraulic chamber that acts to operate the needle valve via a domed piston and control drillings. The hydraulic chamber compensates for temperature changes within the injector assembly, and also allows the injector to operate with a constant reaction time, even after numerous operations.

The hydraulic chamber eliminates the requirement for contacting moving parts within this type of injector. In other types of injector these contact parts will wear, increasing the reaction time of the injector and subsequently affecting the engines performance and emissions.

On the vehicle, the hydraulic chamber is maintained by a 10 bar (145 psi) check valve located in the injector leak-off pipe junction.

Due to the Bosch Generation 3 technology and the injector hydraulic chamber, the injectors will operate with a near instantaneous response time to ECM commands. This provides a finer atomization of the injected fuel, and allows the ECM to precisely control the actuation period of the injector. During certain engine operating conditions, each injector is able to deliver a sequence of up to 5 injections during a single injection cycle. The sequence for an injection cycle of 5 individual deliveries is as follows:

- 2 pilot injections up to 3,200 Revolutions Per Minute (RPM)
- 1 control injection up to 4,500 RPM
- 1 main injection above 4,500 RPM
- 2 post-injections during DPF regeneration phase (no load values).

The pilot injection phase is delivered ahead of the main charge of fuel to produce a steady flame front, and create a progressive pressure rise in the cylinder. The pilot injection phase reduces the lag between the injection of fuel and combustion occurring, allowing the remaining charge of fuel to be injected while combustion is taking place. This injection principle creates an increase in power, and also reduces combustion Noise, Vibration and Harshness (NVH) and exhaust emissions.

On vehicles installed with an exhaust system DPF, the high-pressure fueling system provides a post-injection phase of fuel into the combustion chambers. During the regeneration stage of the DPF, the ECM allows fuel to be injected after the combustion stroke and into the commencement of the exhaust stroke. The post-injection phase causes fuel to burn in the exhaust system, creating high exhaust gas temperatures required to regenerate the DPF.

For additional information, refer to: Electronic Engine Controls - 2.2L Diesel (303-14 Electronic Engine Controls - 2.2L Diesel, Description and Operation) / Exhaust System (309-00B Exhaust System - TD4 2.2L Diesel, Description and Operation).

### Injector Service Information

CAUTION: This type of injector contains a hydraulic chamber. It is important that the injector is handled correctly to prevent the hydraulic chamber from emptying. The injector is to be capped and maintained in an upright position, and must not be laid on the side or shaken.

Do not attempt to remove carbon deposits from the diesel injector nozzle.

The injector is supplied as a complete assembly. The original injector must not be separated.

NOTE: The TD4 engine cylinders are numbered from the rear of the engine (transmission end). Therefore, No. 1 cylinder and No. 1 injector are located at the rear of the engine.

A new copper washer must be installed and the old washer discarded, whenever an injector is removed from the cylinder head. The injector centering ring may be re-used.

If an injector is removed, the injector must be installed to the original cylinder, and does not require re-programming into the ECM.

If an injector is renewed, the new injector 10-digit code and corresponding cylinder number must be programmed into the ECM, using the Land Rover approved diagnostic system.

If the ECM is renewed, all 4 injector 10-digit codes and corresponding cylinder numbers must be programmed into the new ECM, using the Land Rover approved diagnostic system.

## HIGH-PRESSURE FUEL AND LEAK-OFF PIPES

### High-Pressure Fuel Pipe

The HP fuel pipes are connected between the HP pump and fuel rail, and between the fuel rail and the 4 injectors. The pipes are short in length, in order to maintain the maximum fuel system working pressure.

The pipes are single use only, and must be renewed whenever a pipe connection is released.

### Leak-Off Pipes

The fuel system leak-off pipes are installed with quick release type couplings, and connect the fuel rail, injectors and HP pump to the fuel filter.

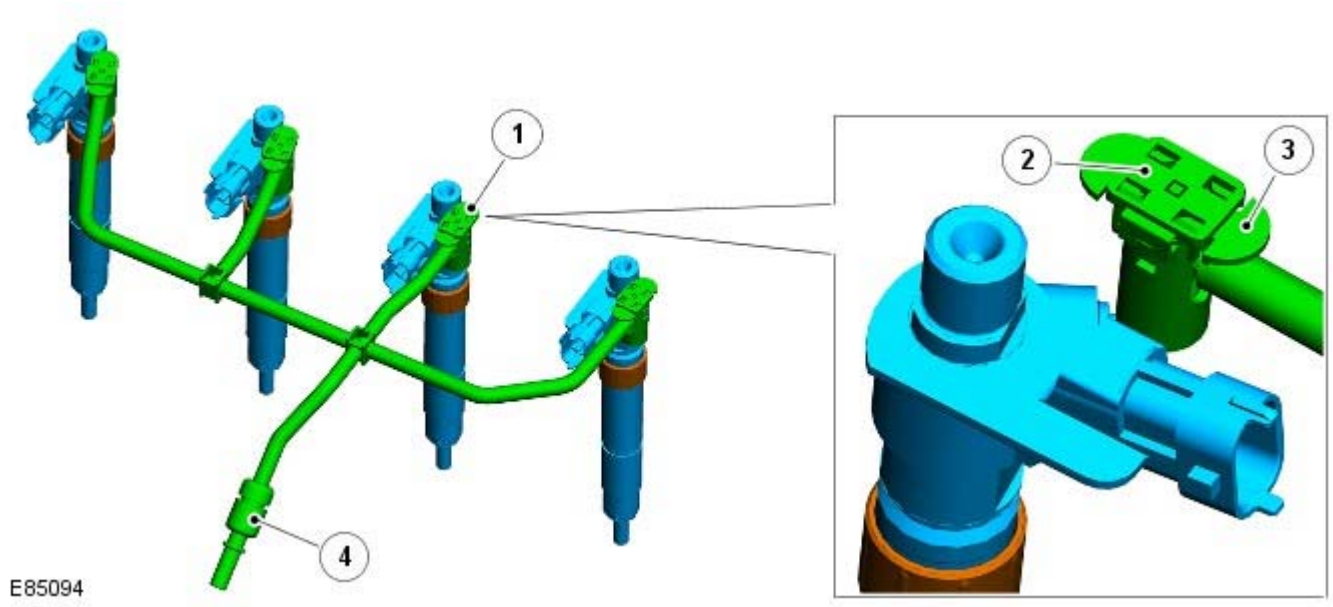


| Item | | Description |
|---|---|---|
| 1 | | Injector leak-off port connection |
| 2 | | Connector locking clip |
| 3 | | Connector release clip |
| 4 | | Non-return valve |

The injector leak-off pipe forms a single component, and is provided as a complete assembly. The injector connector comprises 2 moving parts. This 2-piece type of connection must be correctly removed from the injector otherwise the connector will be damaged.

To remove the injector leak-off connector, the center locking clip must first be pulled upward and then removed using the 2 lugs on the connector release clip. To install the leak-off connector, the connector must be pushed on to the injector leak-off port using the 2 lugs on the connector release clip, and then locked by pushing down on the center locking clip. A pronounced 'click' will be heard when removing or installing the center locking clip.

A 10 bar (145 psi) non-return valve is installed in the fuel injector leak-off pipe junction, and retains pressure within the injector. The 10 bar (145 psi) pressure is necessary to maintain fuel in the hydraulic chamber, and for correct operation of the injector.

Published: 11-May-2011

# Fuel Charging and Controls - TD4 2.2L Diesel - Fuel Charging and Controls

Diagnosis and Testing

## Principles of Operation

For a detailed description of the fuel charging and controls, refer to the relevant Description and Operation section in the workshop manual.
REFER to: Fuel Charging and Controls (303-04B Fuel Charging and Controls - TD4 2.2L Diesel, Description and Operation) / Turbocharger (303-04C Fuel Charging and Controls - Turbocharger - TD4 2.2L Diesel, Description and Operation).

## Inspection and Verification

CAUTION: Diagnosis by substitution from a donor vehicle is **NOT** acceptable. Substitution of control modules does not guarantee confirmation of a fault, and may also cause additional faults in the vehicle being tested and/or the donor vehicle.

1. Verify the customer concern.
2. Visually inspect for obvious signs of mechanical or electrical damage.

**Visual Inspection**

| Mechanical | Electrical |
|---|---|
| • Fuel level<br>• Fuel leaks<br>• Damaged fuel lines<br>• Damaged push connect fittings<br>• Fuel contamination/grade/quality<br>• Throttle body | • Fuses<br>• Loose or corroded electrical connectors<br>• Harnesses<br>• Sensor(s)<br>• Engine Control Module (ECM) |

3. If an obvious cause for an observed or reported concern is found, correct the cause (if possible) before proceeding to the next step
4. If the cause is not visually evident, verify the symptom and refer to the Symptom Chart, alternatively, check for Diagnostic Trouble Codes (DTCs) and refer to the DTC Index.

## Symptom Chart

| Symptom | Possible Cause | Action |
|---|---|---|
| Engine cranks but does not start | • Fuel level<br>• Contaminated fuel<br>• Fuel system leaking/blocked<br>• Air intake system<br>• Electronic engine controls | Check fuel level and for contamination. Check fuel and air intake system integrity. Check for DTCs and refer to the relevant DTC Index |
| Difficult to start | • Fuel level<br>• Contaminated fuel<br>• Fuel system leaking/blocked<br>• Air intake system<br>• Electronic engine controls | Check fuel level and for contamination. Check fuel and air intake system integrity. Check for DTCs and refer to the relevant DTC Index |
| Rough idle | • Low/contaminated fuel<br>• Fuel system leaking/blocked<br>• Electronic engine controls | Check fuel level/condition. Check integrity of fuel and engine control systems. Check for DTCs and refer to relevant DTC Index. |
| Lack of power under acceleration | • Contaminated fuel<br>• Air intake system<br>• Blocked exhaust/catalytic converter<br>• Turbocharger fault<br>• Fuel system<br>• Electronic engine controls<br>• Low engine compressions | Check for fuel contamination. Check for DTCs and refer to relevant DTC Index. Check integrity of air intake, exhaust, turbocharger, and engine control systems |

## DTC Index

NOTE: If the control module/component is suspect and the vehicle remains under manufacturer warranty, refer to the Warranty Policy and Procedures manual (section B1.2), or determine if any prior approval programme is in operation, prior to the installation of a new module/component.

NOTE: Generic scan tools may not read the codes listed, or may read only five digit codes. Match the five digits from the scan tool to the first five digits of the seven digit code listed to identify the fault (the last two digits give extra information read by the manufacturer-approved diagnostic system).

NOTE: When performing voltage or resistance tests, always use a digital multimeter (DMM) accurate to three decimal places

and with a current calibration certificate. When testing resistance, always take the resistance of the DMM leads into account.

NOTE: Check and rectify basic faults before beginning diagnostic routines that involve pinpoint tests.

NOTE: If DTCs are recorded and, after performing the pinpoint tests, a fault is not present, an intermittent concern may be the cause. Always check for loose connections and corroded terminals.

| DTC | Description | Possible Cause | Action |
|---|---|---|---|
| P004513 | Turbo charger/Supercharger Boost Control A Circuit / Open | • Turbo charger actuator power stage output 2 circuit - open load | Carry out the pinpoint tests associated with this DTC using the manufacturer approved diagnostic system |
| P004518 | Turbo charger/Supercharger Boost Control A Circuit / Open | • Power stage temperature dependant current limitation | Carry out the pinpoint tests associated with this DTC using the manufacturer approved diagnostic system |
| P004519 | Turbo charger/Supercharger Boost Control A Circuit / Open | • Turbo charger actuator power stage output 1 circuit - over current | Carry out the pinpoint tests associated with this DTC using the manufacturer approved diagnostic system |
| P004619 | Turbo charger/Supercharger Boost Control A Circuit Range/Performance | • Power stage excess temperature | Carry out the pinpoint tests associated with this DTC using the manufacturer approved diagnostic system |
| P004711 | Turbo charger/Supercharger Boost Control A Circuit Low | • Turbo charger actuator power stage output 1 circuit - short to ground | Carry out the pinpoint tests associated with this DTC using the manufacturer approved diagnostic system |
| P004714 | Turbo charger/Supercharger Boost Control A Circuit Low | • Turbo charger actuator power stage output 2 circuit - short to ground | Carry out the pinpoint tests associated with this DTC using the manufacturer approved diagnostic system |
| P004718 | Turbo charger/Supercharger Boost Control A Circuit Low | • Power stage current limitation | Carry out the pinpoint tests associated with this DTC using the manufacturer approved diagnostic system |
| P004800 | Turbo charger/Supercharger Boost Control A Circuit High | • Actuator power stage error | Carry out the pinpoint tests associated with this DTC using the manufacturer approved diagnostic system |
| P004812 | Turbo charger/Supercharger Boost Control A Circuit High | • Turbo charger actuator power stage output 1 circuit - short to power | Carry out the pinpoint tests associated with this DTC using the manufacturer approved diagnostic system |
| P004815 | Turbo charger/Supercharger Boost Control A Circuit High | • Turbo charger actuator power stage output 2 circuit - short to power | Carry out the pinpoint tests associated with this DTC using the manufacturer approved diagnostic system |
| P008821 | Fuel Rail/System Pressure - Too High | • Pressure control valve circuit - short to power<br>• Pressure control valve stuck closed | Check for pressure control valve DTCs and refer to relevant DTC Index |
| P008822 | Fuel Rail/System Pressure - Too High | • Leaking fuel system<br>• Volume control valve circuit - short to ground, open circuit<br>• Volume control valve stuck open | Check for fuel leaks. Refer to electrical circuit diagrams and check volume control valve circuit for short to ground, open circuit. Install a new high pressure fuel pump as required |
| P008824 | Fuel Rail/System Pressure - Too High | • Leaking fuel system<br>• Pressure control valve stuck<br>• Pressure control valve circuit - short to ground, power, open circuit | Check for fuel leaks. Refer to electrical circuit diagrams and check pressure control valve circuit for short to ground, power, open circuit. Install a new pressure control valve as required |
| P008827 | Fuel Rail/System Pressure - Too High | • Leak in high pressure section<br>• Injector nozzle stuck open/worn<br>• Worn high pressure pump, filter blocked<br>• Leaking pressure control valve<br>• Low pressure section pressure low (leak in | Check for fuel leaks in high and low pressure systems, check for additional DTCs and refer to DTC Index |

| DTC | Description | Possible Cause | Action |
|---|---|---|---|
| | | system, pump output low) | |
| P009B00 | Fuel Pressure Relief Control Circuit/Open | • Pressure control valve control circuit - open load | Carry out the pinpoint tests associated with this DTC using the manufacturer approved diagnostic system |
| P009C00 | Fuel Pressure Relief Control Circuit Low | • Pressure control valve control circuit - short to ground | Carry out the pinpoint tests associated with this DTC using the manufacturer approved diagnostic system |
| P009D00 | Fuel Pressure Relief Control Circuit High | • Pressure control valve control circuit - short to power | Carry out the pinpoint tests associated with this DTC using the manufacturer approved diagnostic system |
| P009E00 | Fuel Pressure Relief Control Performance/Stuck Off | • Pressure control valve power stage excess temperature | Refer to electrical circuit diagrams and check pressure control valve circuit for high resistance, if no fault identified install new ECM. Refer to the new module/component installation note at the top of the DTC Index |
| P00AF75 | Turbo charger/Supercharger Boost Control A Module Performance | • Variable Gate Turbo charger sensor circuit - short to ground, power, open circuit<br>• Variable Gate Turbo charger sensor failure | Refer to electrical circuit diagrams and check variable gate Turbo charger sensor circuit for short to ground, power, open circuit. Install a new Turbo charger as required |
| P018200 | Fuel Temperature Sensor A Circuit Low | • Fuel temperature sensor voltage below lower limit | Carry out the pinpoint tests associated with this DTC using the manufacturer approved diagnostic system |
| P018300 | Fuel Temperature Sensor A Circuit High | • Fuel temperature sensor voltage above upper limit | Carry out the pinpoint tests associated with this DTC using the manufacturer approved diagnostic system |
| P023422 | Turbo charger/Supercharger A Over boost Condition | • Boost pressure control deviation below lower limit at full load | Check for turbo charger related DTCs and refer to the relevant DTC Index |
| P023700 | Turbo charger/Supercharger Boost Sensor A Circuit Low | • Boost pressure sensor circuit - short to ground, open circuit | Carry out the pinpoint tests associated with this DTC using the manufacturer approved diagnostic system |
| P023800 | Turbo charger/Supercharger Boost Sensor A Circuit High | • Boost pressure sensor circuit - short to power | Carry out the pinpoint tests associated with this DTC using the manufacturer approved diagnostic system |
| P025100 | Injection Pump Fuel Metering Control A | • Fuel metering unit control circuit - open load | Carry out the pinpoint tests associated with this DTC using the manufacturer approved diagnostic system |
| P02CC21 | Cylinder 1 Fuel Injector Offset Learning at Min Limit | • Injector energising time calibration during overrun - time below lower limit | Install a new injector |
| P02CD22 | Cylinder 1 Fuel Injector Offset Learning at Max Limit | • Injector energising time calibration during overrun - time above upper limit | Install a new injector |
| P02CE21 | Cylinder 2 Fuel Injector Offset Learning at Min Limit | • Injector energising time calibration during overrun - time below lower limit | Install a new injector |
| P02CF22 | Cylinder 2 Fuel Injector Offset Learning at Max Limit | • Injector energising time calibration during overrun - time above upper limit | Install a new injector |
| P02D021 | Cylinder 3 Fuel Injector Offset Learning at Min Limit | • Injector energising time calibration during overrun - time below lower limit | Install a new injector |
| P02D122 | Cylinder 3 Fuel Injector Offset Learning at Max Limit | • Injector energising time calibration during overrun - time above upper limit | Install a new injector |
| P02D221 | Cylinder 4 Fuel Injector Offset Learning at Min Limit | • Injector energising time calibration during overrun - time below lower limit | Install a new injector |

| DTC | Description | Possible Cause | Action |
|---|---|---|---|
| P02D322 | Cylinder 4 Fuel Injector Offset Learning at Max Limit | • Injector energising time calibration during overrun - time above upper limit | Install a new injector |
| P02E013 | Diesel Intake Air Flow Control Circuit/Open | • Throttle motor control circuit - open circuit | Refer to electrical circuit diagrams and check throttle control circuit for open circuit |
| P02E100 | Diesel Intake Air Flow Control Performance | • Throttle valve stuck during after run learning routine<br>• Error in driver IC (CJ230 power stage) for Throttle Valve Actuator | Clear the DTC and re-test. If the DTC remains, install a new ECM. Refer to the new module/component installation note at the top of the DTC Index |
| P02E119 | Diesel Intake Air Flow Control Performance | • Throttle motor control circuit - short circuit overload error | Refer to electrical circuit diagrams and check throttle control circuit for short circuit fault |
| P02E14B | Diesel Intake Air Flow Control Performance | • Excess Temperature in CJ230 power stage for Throttle Valve Actuator | Clear the DTC and re-test. If the DTC remains, install a new ECM. Refer to the new module/component installation note at the top of the DTC Index |
| P02E211 | Diesel Intake Air Flow Control Circuit Low | • Throttle motor control circuit - short to ground | Refer to electrical circuit diagrams and check throttle control circuit for short to ground |
| P02E214 | Diesel Intake Air Flow Control Circuit Low | • Throttle motor control circuit - short to ground | Refer to electrical circuit diagrams and check throttle control circuit for short to ground |
| P02E312 | Diesel Intake Air Flow Control Circuit High | • Throttle motor control circuit - short to power | Refer to electrical circuit diagrams and check throttle control circuit for short to power |
| P02E315 | Diesel Intake Air Flow Control Circuit High | • Throttle motor control circuit - short to power | Refer to electrical circuit diagrams and check throttle control circuit for short to power |
| P02E471 | Diesel Intake Air Flow Control Stuck Open | • Throttle valve stuck during normal engine running - attempt to unstick valve unsuccessful | Check/clear throttle valve from obstruction/sticking |
| P02E571 | Diesel Intake Air Flow Control Stuck Closed | • Throttle valve stuck closed during normal engine running - attempt to unstick valve unsuccessful | Check/clear throttle valve from obstruction/sticking |
| P02E728 | Diesel Intake Air Flow Position Sensor Range/Performance | • Throttle valve open or closed position offset difference with first learning too large<br>• Throttle valve open or closed position offset difference with previous learning too large | Check/clear throttle valve from obstruction/sticking, clear DTC and re-test. If the DTC remains, install a new throttle body |
| P02E800 | Diesel Intake Air Flow Position Sensor Circuit Low | • Throttle position sensor circuit - short to ground, open circuit | Refer to electrical circuit diagrams and check throttle position sensor circuit for short to ground, open circuit |
| P02E872 | Diesel Intake Air Flow Position Sensor Circuit Low | • Throttle valve position deviation - valve stuck open | Check/clear throttle valve from obstruction/sticking |
| P02E900 | Diesel Intake Air Flow Position Sensor Circuit High | • Throttle position sensor circuit - short to power | Refer to electrical circuit diagrams and check throttle position sensor circuit for short to power |
| P02E973 | Diesel Intake Air Flow Position Sensor Circuit High | • Throttle valve position deviation - valve stuck closed | Check/clear throttle valve from obstruction/sticking |
| P031300 | Misfire Detected With Low Fuel | • Low fuel - misfire induced by ECM to warn driver before shut off | Carry out the pinpoint tests associated with this DTC using the manufacturer approved diagnostic system |

| DTC | Description | Possible Cause | Action |
|---|---|---|---|
| P062B00 | Internal Control Module Fuel Injector Control Performance | • Overrun Monitor - injector energising times too long during overrun<br>• Redundant shut off path error | Install a new ECM, refer to the new module/component installation note at the top of the DTC Index.<br>REFER to: Powertrain Control Module (PCM) (303-14 Electronic Engine Controls - 2.2L Diesel, Removal and Installation). |
| P062B16 | Internal Control Module Fuel Injector Control Performance | • Redundant shut off path voltage too low | Install a new ECM, refer to the new module/component installation note at the top of the DTC Index.<br>REFER to: Powertrain Control Module (PCM) (303-14 Electronic Engine Controls - 2.2L Diesel, Removal and Installation). |
| P062B17 | Internal Control Module Fuel Injector Control Performance | • Redundant shut off path voltage too high | Install a new ECM, refer to the new module/component installation note at the top of the DTC Index.<br>REFER to: Powertrain Control Module (PCM) (303-14 Electronic Engine Controls - 2.2L Diesel, Removal and Installation). |
| P129800 | Injector Driver Module Failure | • ECM internal failure | Install a new module, refer to the new module/component installation note at the top of the DTC Index |
| P228800 | Injector Control Pressure Too High | • Leaking fuel system<br>• Fuel high pressure pump circuit - short to ground, open circuit<br>• Fuel high pressure pump failure | Check for fuel leaks. Refer to the electrical circuit diagrams and check fuel high pressure pump circuit for short to ground, open circuit. Install a new high pressure pump as required |
| P256263 | Turbo charger Boost Control Position Sensor A Circuit | • Position Error above stall timer limit for timer duration | Carry out ODST and install new turbo if fail condition identified |
| P256271 | Turbo charger Boost Control Position Sensor A Circuit | • Turbo charger Actuator Position sensor detects actuator stuck during after run learning | Carry out the pinpoint tests associated with this DTC using the manufacturer approved diagnostic system |
| P256275 | Turbo charger Boost Control Position Sensor A Circuit | • Turbo charger actuator stuck - motor switched off | Check Turbo charger vane actuator mechanism is free from obstruction and carbon build-up |
| P256277 | Turbo charger Boost Control Position Sensor A Circuit | • Turbo charger Actuator Position sensor detects actuator stuck during after run learning | Carry out the pinpoint tests associated with this DTC using the manufacturer approved diagnostic system |
| P256371 | Turbo charger Boost Control Position Sensor A Circuit | • Turbo charger actuator is sticking | Check Turbo charger vane actuator mechanism is free from obstruction and carbon build-up |
| P256372 | Turbo charger Boost Control Position Sensor A Circuit Range/Performance | • Turbo charger vane actuator stuck open - unable to reach required position | Check Turbo charger vane actuator mechanism is free from obstruction and carbon build-up |
| P256373 | Turbo charger Boost Control Position Sensor A Circuit Range/Performance | • Turbo charger vane actuator stuck closed - unable to reach required position | Check Turbo charger vane actuator mechanism is free from obstruction and carbon build-up |
| P256436 | Turbo charger Boost Control Position Sensor A Circuit Low | • Turbo charger boost control position sensor A circuit - short to ground, power, open circuit<br>• Turbo charger boost control position sensor failure | Carry out the pinpoint tests associated with this DTC using the manufacturer approved diagnostic system . Install a new sensor as required.<br>REFER to: Turbocharger (303-04C Fuel Charging and Controls - Turbocharger - TD4 2.2L Diesel, Removal and Installation). |
| P256437 | Turbo charger Boost Control Position Sensor A Circuit Low | • Turbo charger boost control position sensor A circuit - short to ground, power, open circuit<br>• Turbo charger boost control position sensor | Carry out the pinpoint tests associated with this DTC using the manufacturer approved diagnostic system . Install a new sensor as required.<br>REFER to: Turbocharger (303-04C Fuel Charging and Controls - Turbocharger - TD4 2.2L Diesel, Removal and Installation). |

| DTC | Description | Possible Cause | Action |
|---|---|---|---|
| | | failure | |
| P256537 | Turbo charger Boost Control Position Sensor A Circuit High | • Turbo charger boost control position sensor A circuit - short to ground, power, open circuit<br>• Turbo charger boost control position sensor failure | Carry out the pinpoint tests associated with this DTC using the manufacturer approved diagnostic system . Install a new sensor as required. REFER to: Turbocharger (303-04C Fuel Charging and Controls - Turbocharger - TD4 2.2L Diesel, Removal and Installation). |
| P256538 | Turbo charger Boost Control Position Sensor A Circuit High | • Turbo charger boost control position sensor A circuit - short to ground, power, open circuit<br>• Turbo charger boost control position sensor failure | Carry out the pinpoint tests associated with this DTC using the manufacturer approved diagnostic system . Install a new sensor as required. REFER to: Turbocharger (303-04C Fuel Charging and Controls - Turbocharger - TD4 2.2L Diesel, Removal and Installation). |

Published: 11-May-2011

# Fuel Charging and Controls - TD4 2.2L Diesel - Fuel Injector

Removal and Installation

## Removal

WARNINGS:

Avoid flames, sparks or lighted substances.

Wait for a minimum of 1 minute after the engine has stopped before carrying out any repair to the fuel injection system.

CAUTIONS:

Make sure that the area around the component is clean and free of foreign material.

Make sure that all openings are sealed. Use new blanking caps.

Fuel injectors must not be dismantled or the nozzles cleaned, not even with ultrasonic equipment. Install new fuel injectors if necessary.

Fuel injectors must be installed to their original position.

Cap the fuel injector nozzle to prevent damage before storing vertically.

Fuel injectors must be stored vertically and immediately capped when removed, to prevent the fuel from draining.

If a new component has been installed, configure using Land Rover approved diagnostic equipment.

Bleed the fuel system by cranking the engine to purge the air from the system.

NOTE: If the fuel injectors are to be removed or replaced as a set, installation should be done in pairs. Injectors 2 and 3, 1 and 4 respectively.

1. Disconnect the battery ground cable.

   Refer to: Specifications (414-00 Battery and Charging System - General Information, Specifications).

2. Remove the engine cover.

   Refer to: Engine Cover - TD4 2.2L Diesel (501-05 Interior Trim and Ornamentation, Removal and Installation).

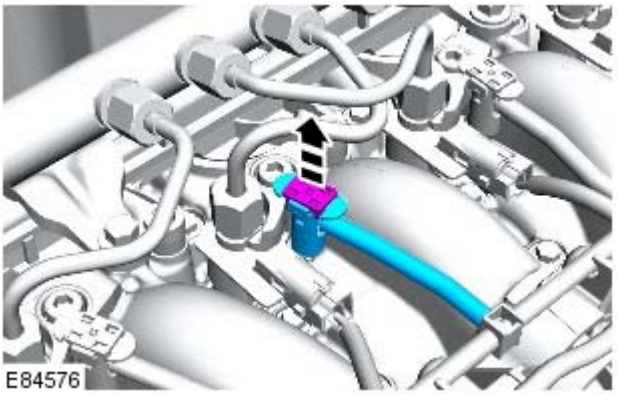


3.

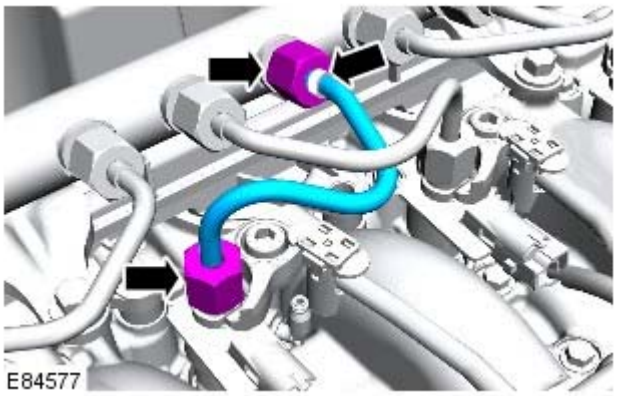


4. CAUTIONS:

   Make sure that the fuel line remains in contact at both ends until both unions nuts have been unscrewed and the area around the joints thoroughly cleaned.

   Make sure that all openings are sealed. Use new blanking caps.

   Remove and discard the high-pressure fuel supply line.

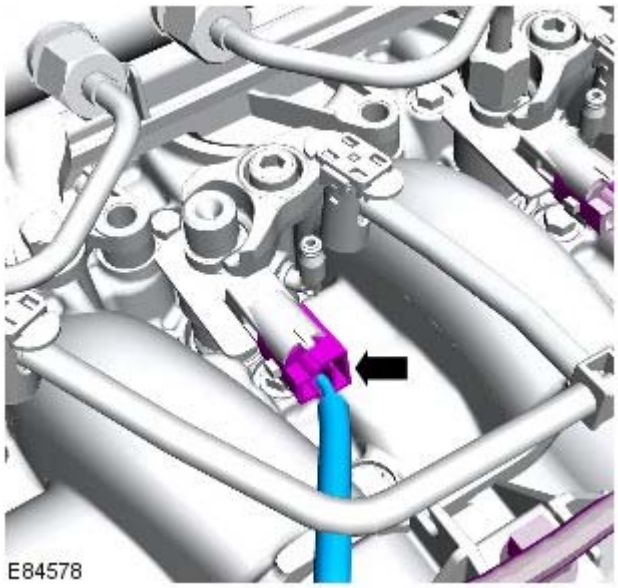


5.

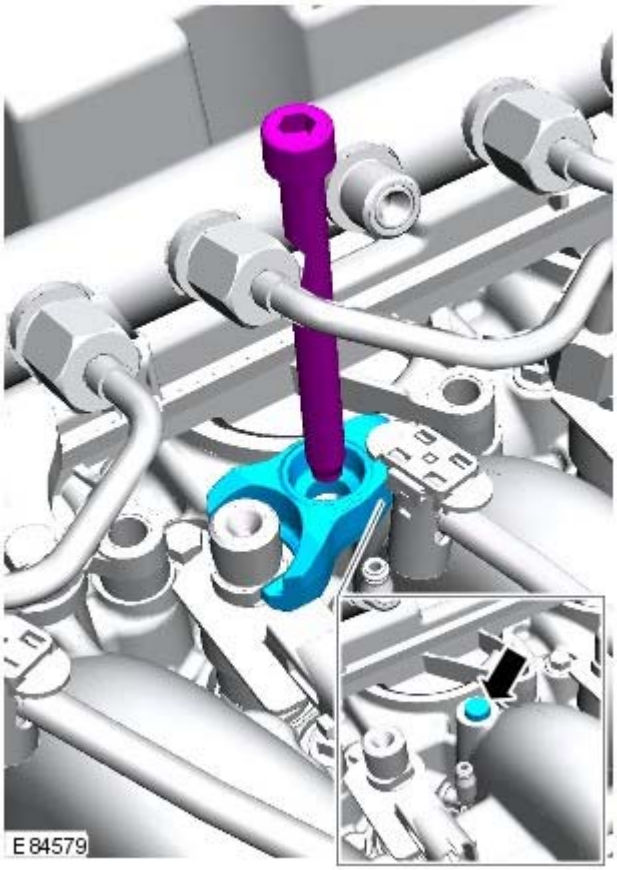


6. CAUTION: Note the position of the injector clamp peg

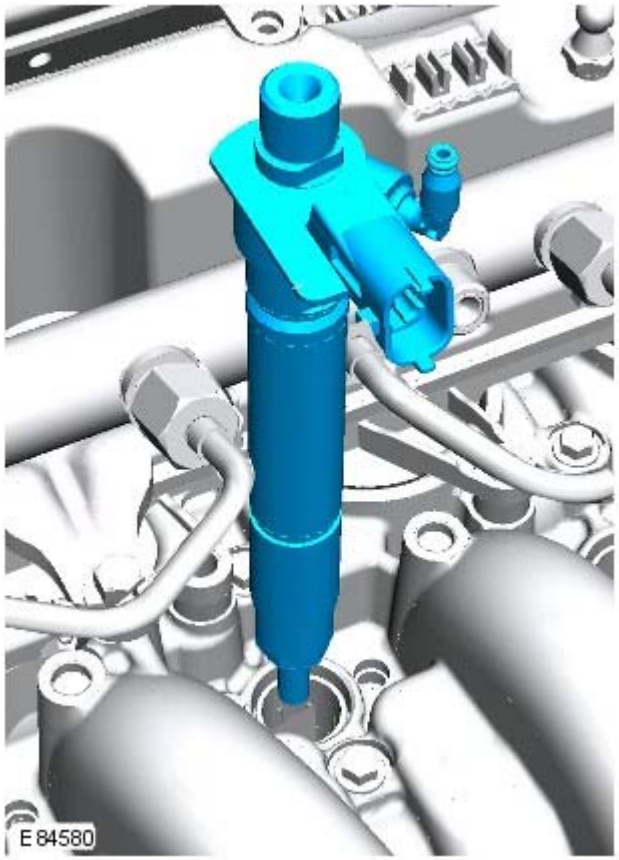


7. CAUTIONS:

   Cap the fuel injector nozzle to prevent damage before storing vertically.

   Fuel injectors must be stored vertically and immediately capped when removed, to prevent the fuel from draining.

   Replace the washer.

   Note the position of the plastic alignment sleeve.

## Installation

1. CAUTIONS:

   Make sure that the component is clean, free of foreign material and lubricant.

   Make sure that a new sealing washer is installed.

   Install the fuel injector.

   *Torque:*
   Stage 1: 5 Nm
   Stage 2: 130°

2. CAUTION: Make sure that the component is clean, free of foreign material and lubricant.

   - Install a new high-pressure fuel supply line but do not fully tighten at this stage.
   - Tighten the high-pressure fuel supply line.

     *Torque:*
     Stage 1: 22 Nm
     Stage 2: 25 Nm

3. Attach the spill return line and secure with the keeper.

4. Install the engine cover.

   Refer to: Engine Cover - TD4 2.2L Diesel (501-05 Interior Trim and

Ornamentation, Removal and Installation).

5. CAUTION: Bleed the fuel system by cranking the engine to purge the air from the system.

   Bleed the fuel system.

6. If a new component has been installed, configure using Land Rover approved diagnostic equipment.

Published: 11-May-2011

# Fuel Charging and Controls - TD4 2.2L Diesel - Fuel Rail

Removal and Installation

## Removal

WARNINGS:

Avoid flames, sparks or lighted substances.

Wait for a minimum of 1 minute after the engine has stopped before carrying out any repair to the fuel injection system.

CAUTIONS:

Make sure that the area around the component is clean and free of foreign material.

Make sure that all openings are sealed. Use new blanking caps.

Bleed the fuel system by cranking the engine to purge the air from the system.

NOTE: The fuel pressure and temperature sensors are an integral part of the fuel rail and must not be changed separately.

1. Disconnect the battery ground cable.

   Refer to: Specifications (414-00 Battery and Charging System - General Information, Specifications).

2. Remove the engine cover.

   Refer to: Engine Cover - TD4 2.2L Diesel (501-05 Interior Trim and Ornamentation, Removal and Installation).

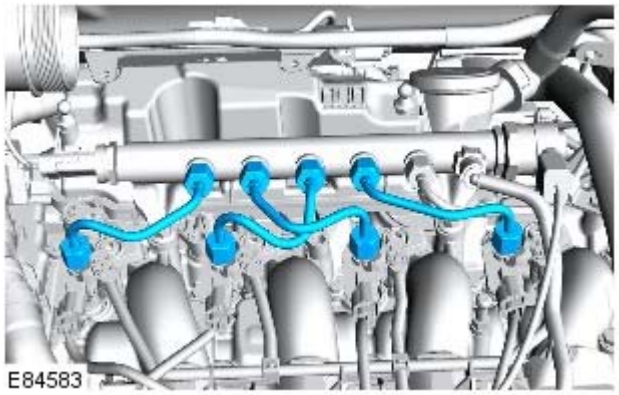


3. CAUTIONS:

   Make sure that the fuel line remains in contact at both ends until both unions nuts have been unscrewed and the area around the joints thoroughly cleaned.

   Make sure that all openings are sealed. Use new blanking caps.

   Remove and discard the 4 high-pressure fuel supply lines.

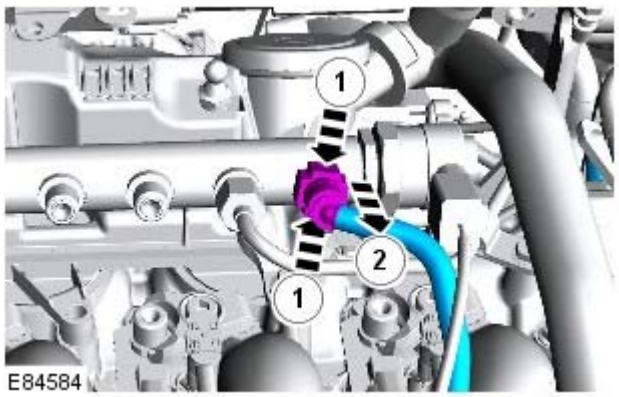


4.

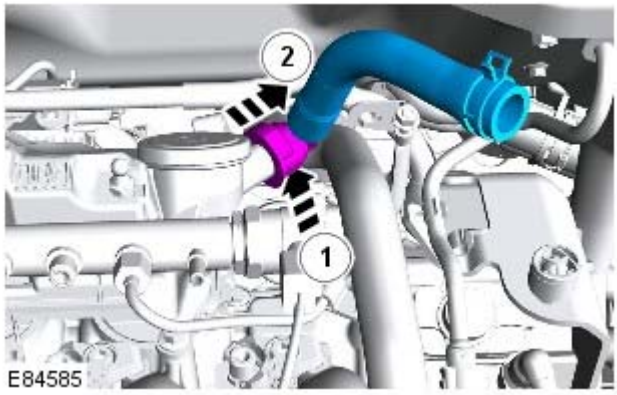


5.

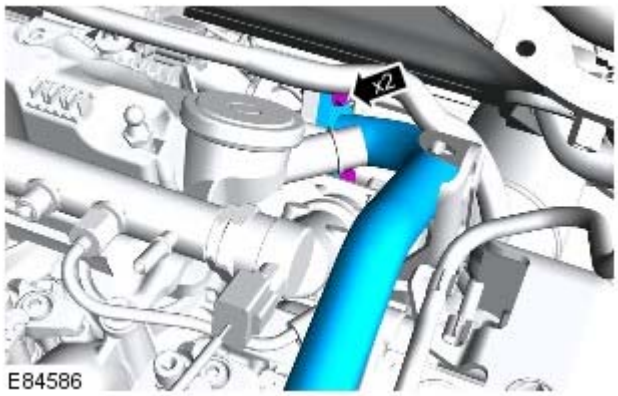


6.

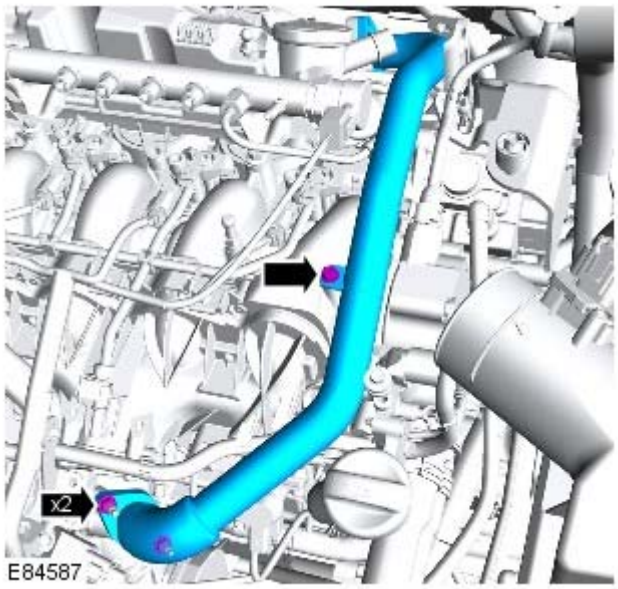


7. CAUTION: Make sure that all openings are sealed. Use new blanking caps.

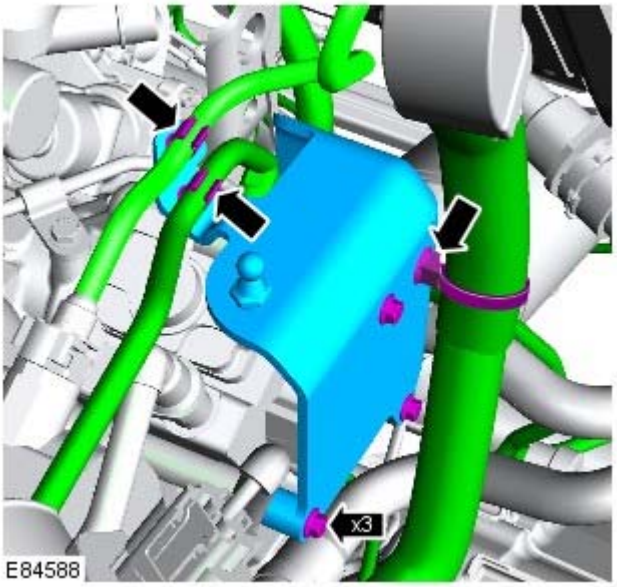


8.

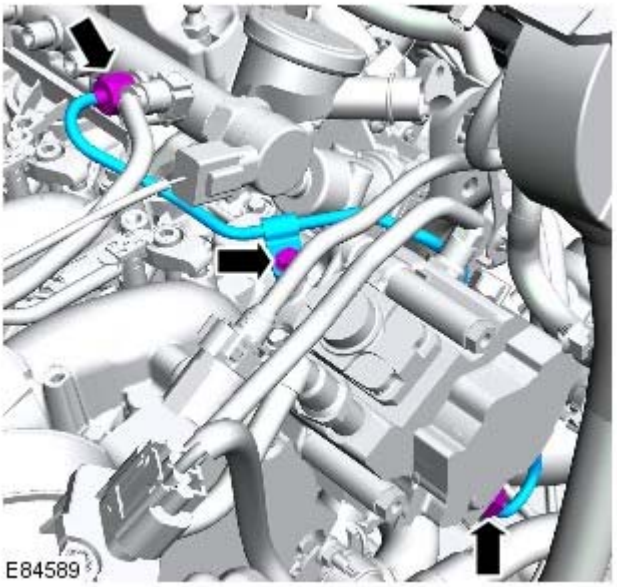


9. CAUTIONS:

Make sure that the area around the component is clean and free of foreign material.

Make sure that all openings are sealed. Use new blanking caps.

NOTE: Use an additional wrench to prevent the component from rotating.

Release the fuel pump to fuel rail, high-pressure fuel line.

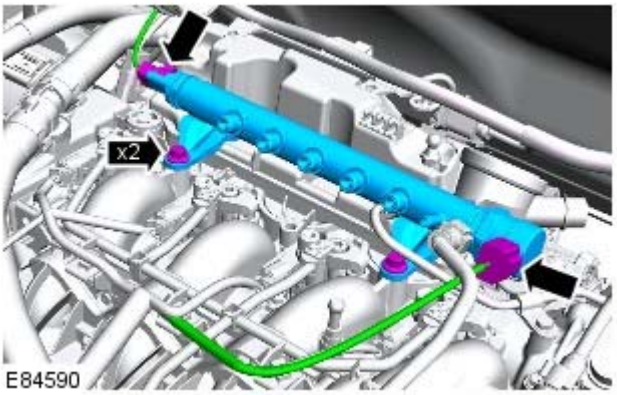


10.

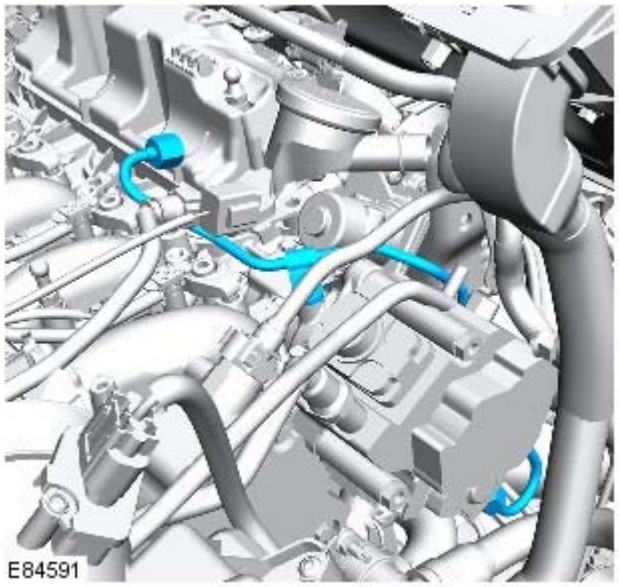


11. Remove and discard the fuel pump to fuel rail, high-pressure fuel line.

## Installation

1. CAUTION: Make sure that the area around the component is clean and free of foreign material.

   Install the new fuel pump to fuel rail, high-pressure fuel line.

2. CAUTION: Make sure that the area around the component is clean and free of foreign material.

   Install the fuel rail.

   *Torque:* 22 Nm

3. CAUTION: Make sure that the component is clean, free of foreign material and lubricant.

   - Attach the fuel pump to fuel rail high-pressure fuel supply line, but do not fully tighten at this stage.
   - Tighten the high-pressure fuel supply line.

     *Torque:*
     Stage 1:22 Nm
     Stage 2:25 Nm
   - Install the high-pressure fuel supply line bolt.

     *Torque:* 8 Nm

4. Install the fuel pump bracket.

   *Torque:* 8 Nm

5. Install the EGR pipe.

   *Torque:* 10 Nm

6. Install the breather line.

7. Connect the low-pressure fuel return line.

8. CAUTIONS:

   Make sure that the area around the component is clean and free of foreign material.

   The fuel injector high pressure fuel supply lines should be installed in pairs. Injectors 2 and 3, 1 and 4 respectively.

   - Install the new high-pressure fuel supply lines, but do not fully tighten at this stage.
   - Tighten the new high-pressure fuel supply lines.

     *Torque:*
     Stage 1: 22 Nm
     Stage 2: 25 Nm

9. Install the engine cover.

   Refer to: Engine Cover - TD4 2.2L Diesel (501-05 Interior Trim and Ornamentation, Removal and Installation).

10. Connect the battery ground cable.

    Refer to: Specifications (414-00 Battery and Charging System - General Information, Specifications).

11. CAUTION: Bleed the fuel system by cranking the engine to purge the air from the system.

    Bleed the fuel system.

Published: 11-May-2011

# Fuel Charging and Controls - TD4 2.2L Diesel - Fuel Pump

Removal and Installation

## Removal

WARNINGS:

Avoid flames, sparks or lighted substances.

Wait for a minimum of 1 minute after the engine has stopped before carrying out any repair to the fuel injection system.

CAUTIONS:

Make sure that the area around the component is clean and free of foreign material.

Make sure that all openings are sealed. Use new blanking caps.

Bleed the fuel system by cranking the engine to purge the air from the system.

1. Disconnect the battery ground cable.

   Refer to: Specifications (414-00 Battery and Charging System - General Information, Specifications).

2. Remove the engine cover.

   Refer to: Engine Cover - TD4 2.2L Diesel (501-05 Interior Trim and Ornamentation, Removal and Installation).

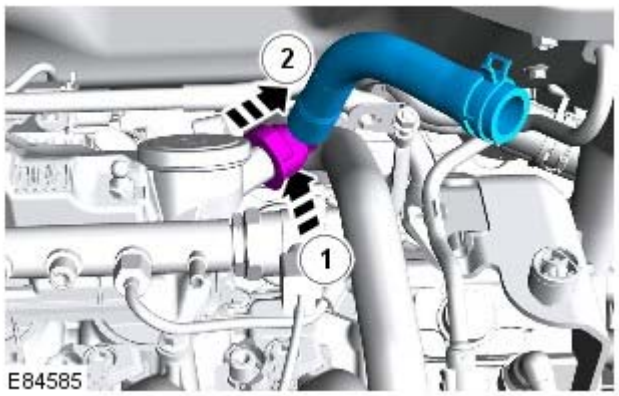


3.

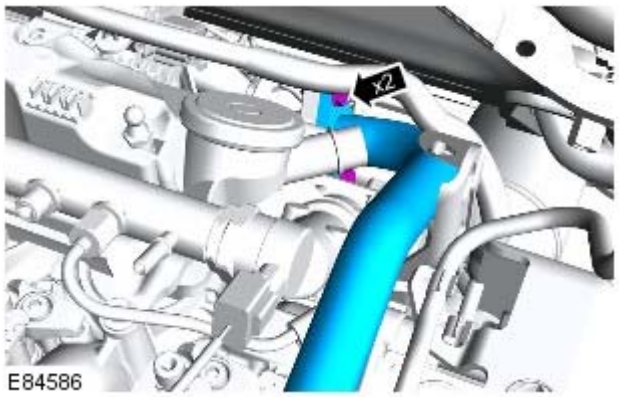


4.

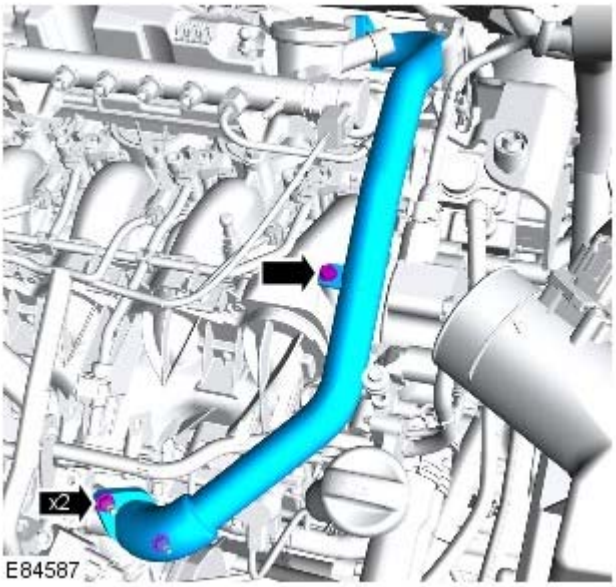


5. CAUTION: Make sure that all openings are sealed. Use new blanking caps.

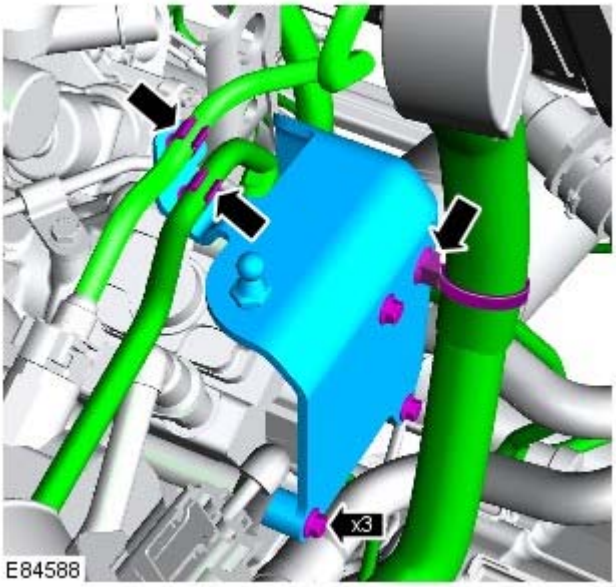


6.

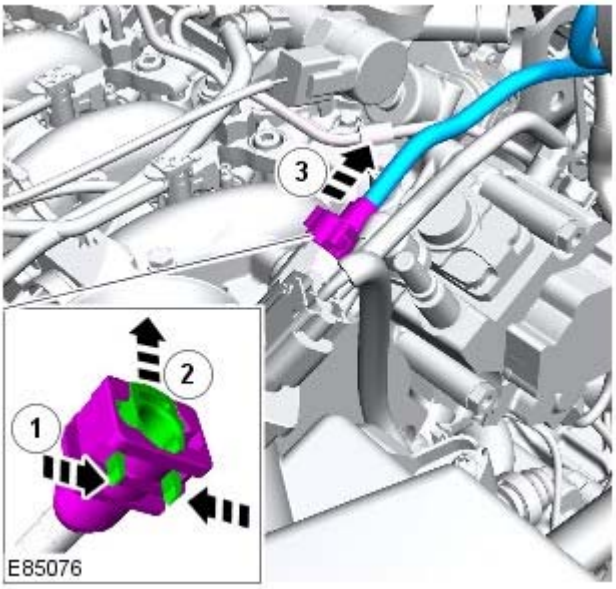


7. CAUTIONS:

Make sure that the area around the component is clean and free of foreign material.

Make sure that all openings are sealed. Use new blanking caps.

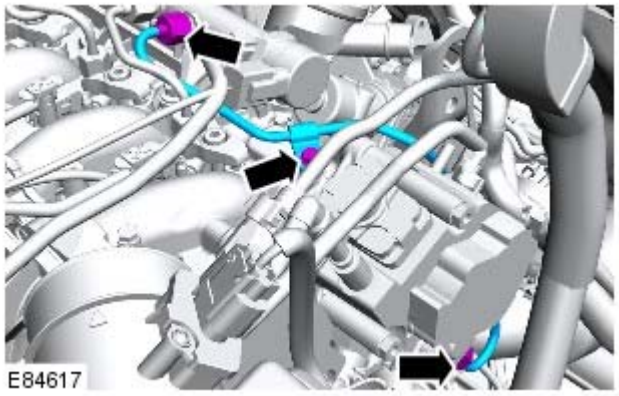


8. CAUTIONS:

Make sure that the area around the component is clean and free of foreign material.

Make sure that all openings are sealed. Use new blanking caps.

NOTE: Use an additional wrench to prevent the component from rotating.

Release the fuel pump to fuel rail, high-pressure fuel line.

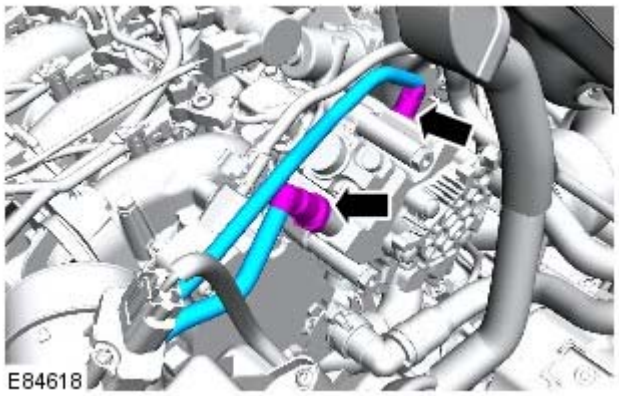


9. CAUTIONS:

Make sure that the area around the component is clean and free of foreign material.

Make sure that all openings are sealed. Use new blanking caps.

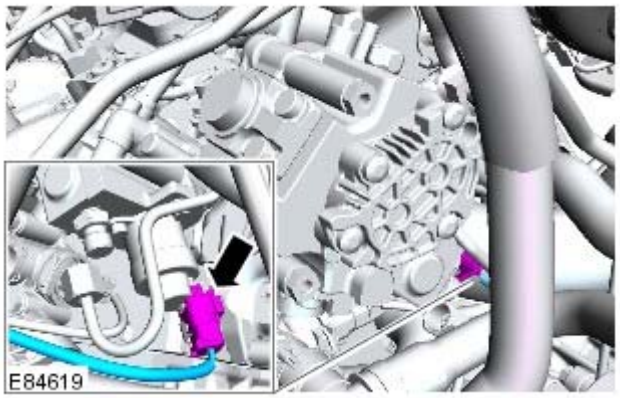


10.

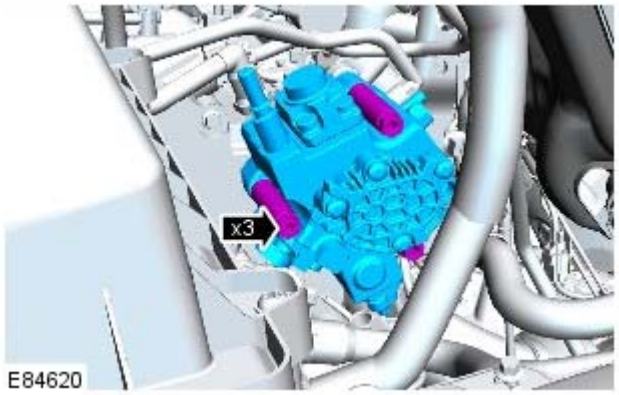


11. CAUTION: Discard the seal.

NOTE: Make sure the fuel pump drive remains captive when removing the fuel pump.

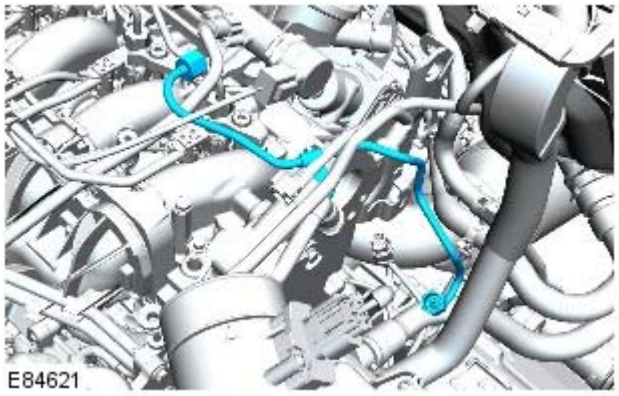


12. Remove and discard the fuel pump to fuel rail, high-pressure fuel line.

## Installation

1. CAUTION: Make sure that the area around the component is clean and free of foreign material.

   Install the new fuel pump to fuel rail, high-pressure fuel line.

2. CAUTIONS:

   Extreme cleanliness must be exercised when handling this component.

   Install a new seal.

   Install the fuel pump.

   *Torque:* 22 Nm

3. CAUTION: Make sure that the component is clean, free of foreign material and lubricant.

   - Attach the fuel pump to fuel rail high-pressure fuel supply line, but do not fully tighten at this stage.
   - Tighten the high-pressure fuel supply line.

     *Torque:*
     Stage 1:22 Nm
     Stage 2:25 Nm
   - Install the high-pressure fuel supply line bolt.

     *Torque:* 8 Nm

4. Connect the brake booster vacuum line.

5. Install the fuel pump bracket.

   *Torque:* 8 Nm

6. Install the EGR pipe.

   *Torque:* 10 Nm

7. Install the breather line.

8. Install the engine cover.

   Refer to: Engine Cover - TD4 2.2L Diesel (501-05 Interior Trim and Ornamentation, Removal and Installation).

9. Connect the battery ground cable.

   Refer to: Specifications (414-00 Battery and Charging System - General Information, Specifications).

10. CAUTION: Bleed the fuel system by cranking the engine to purge the air from the system.

    Bleed the fuel system.

Published: 11-May-2011

# Fuel Charging and Controls - TD4 2.2L Diesel - Throttle Body

Removal and Installation

## Removal

1. Remove the cover and disconnect the battery ground cable.

   Refer to: Specifications (414-00 Battery and Charging System - General Information, Specifications).

2. Remove the engine cover.

   Refer to: Engine Cover - TD4 2.2L Diesel (501-05 Interior Trim and Ornamentation, Removal and Installation).

3. Remove the manifold absolute pressure (MAP) sensor.

   Refer to: Manifold Absolute Pressure (MAP) Sensor (303-14B Electronic Engine Controls - TD4 2.2L Diesel, Removal and Installation).

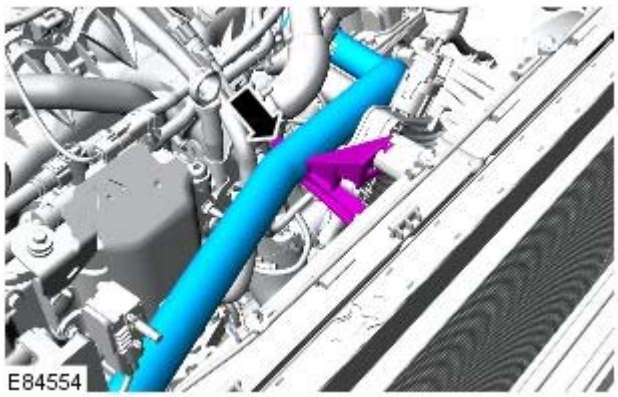


4.

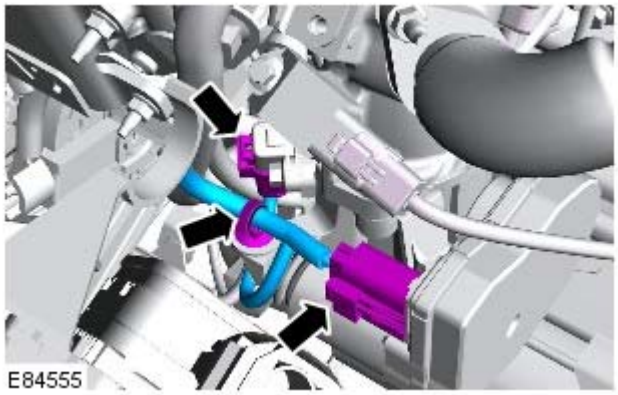


5.

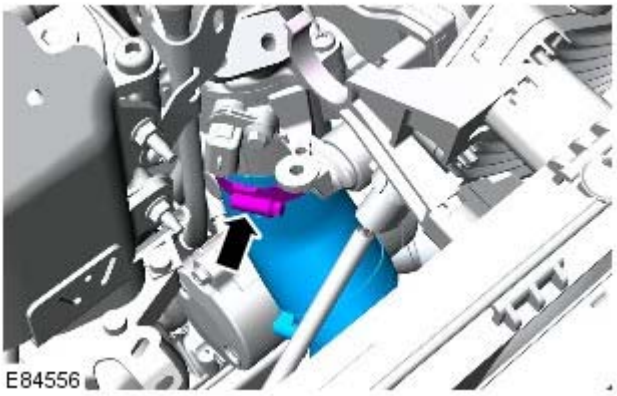


6. CAUTION: Make sure that all openings are sealed.

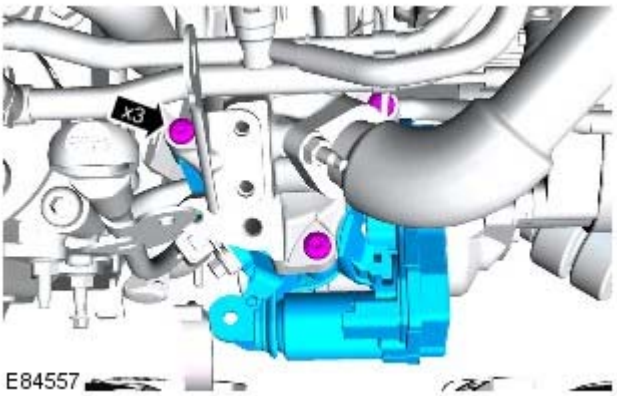


7. CAUTIONS:

   The seal is to be reused unless damaged.

   Make sure that all openings are sealed.

8. CAUTION: The seal is to be reused unless damaged.

   NOTE: Do not disassemble further if the component is removed for access only.

## Installation

1. CAUTION: Make sure that the mating faces are clean and free of foreign material.

   Install the air temperature sensor.

2. CAUTION: Make sure that the mating faces are clean and free of foreign material.

   Install the throttle body and tighten the screws evenly.

   *Torque:* 9 Nm

3. CAUTION: Make sure that the mating faces are clean and free of

foreign material.

Connect the intake hose and secure with the clip.

4. Connect the electrical connectors.

5. Secure the coolant top hose.

6. Install the MAP sensor.

   Refer to: Manifold Absolute Pressure (MAP) Sensor (303-14B Electronic Engine Controls - TD4 2.2L Diesel, Removal and Installation).

7. Install the engine cover.

   Refer to: Engine Cover - TD4 2.2L Diesel (501-05 Interior Trim and Ornamentation, Removal and Installation).

8. Connect the battery ground cable and install the cover.

   Refer to: Specifications (414-00 Battery and Charging System - General Information, Specifications).